TOUR/DRIVER GUIDES MODULE 8:
ROAD SAFETY & BASIC VEHICLE MECHANICS

INTRODUCTION

As tour/.driver guides spend a lot of time driving tourists around, either on paved roads or on dirt roads, it is important for them to know how to do so safely. That is why this module provides an introduction into road safety and vehicle mechanics. It is highly recommended to implement this module with the help of an expert and with actual safari vehicles at hand.

FACILITATOR'S TIP:
The module is based on the assumption that the participants have their driver's licence. This is not a module that teaches the participants how to drive a safari vehicle. However, it is recommended this module is supplemented with a practice on driving safari vehicles.

OVERVIEW

Learning Goals

Knowledge

- The participants will learn about the different components of a safari vehicle.

Attitude

- The participants will understand that it is necessary to prepare vehicles correctly before going on a trip.

Skills

- The participants will be able to do a vehicle pre-check correctly.

SESSION 8A: Map Reading & Navigating | **SESSION 8B:** Introduction into Safari Vehicles | **SESSION 8C:** Common Car Issues & Changing a Tire

BEFORE YOU START, YOU NEED...

- ☐ Flipcharts
- ☐ Large paper
- ☐ Marker and pens
- ☐ Sticky notes

SESSION 8A: **Introduction into Safari Vehicles**

AGENDA

Exercise:
Find the Part
(10 min)

(Guest) Lecture:
Understanding and Preparing Safari Vehicles
(30 min)

Exercise:
Vehicle Pre-Check
(20 min)

INSTRUCTIONS

Exercise: Find the Part (10 min)

In the following exercise, the participants will be introduced to a drawing of a vehicle [land cruiser & super custom] including under the hood.

1. Divide the group into five groups.
2. Ask them to identify where on the vehicle certain parts are
3. Explain that each car is different however to ensure that for tourists to have the best possible experience our cars have to go into the field having been properly checked and an understanding of a vehicle is essential. Explain that it is crucial to be able to understand or identify the issues on a vehicle and how to rectify them.

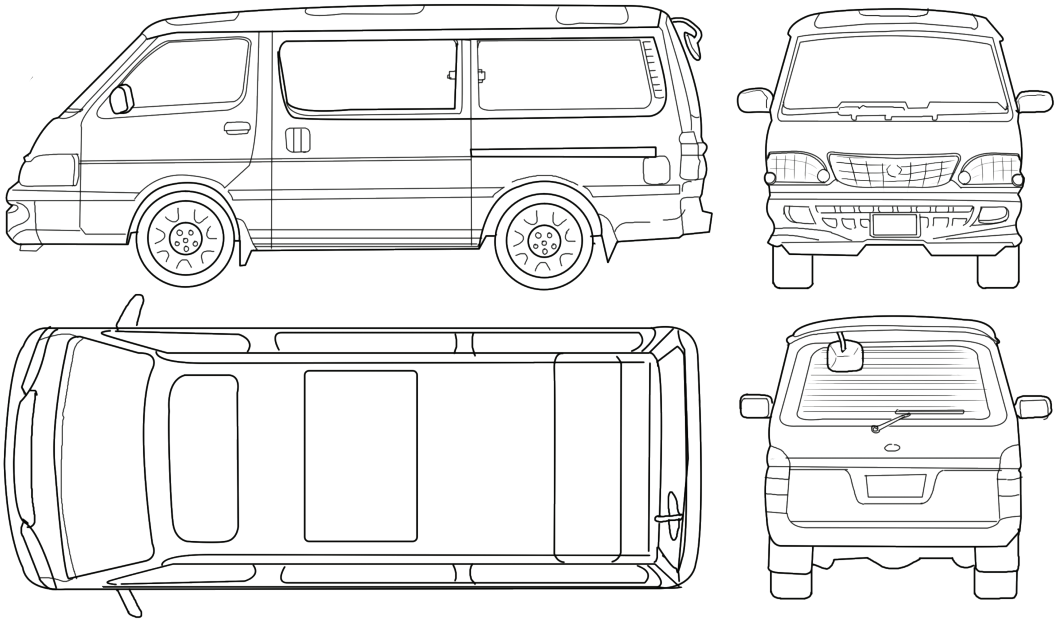

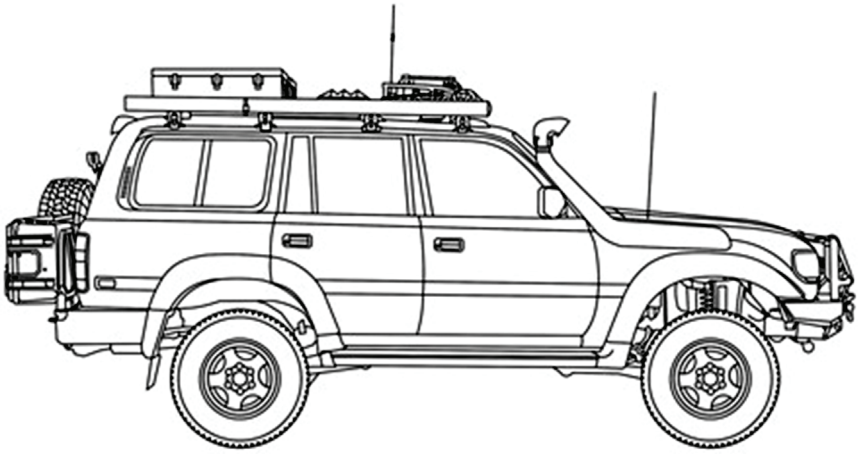

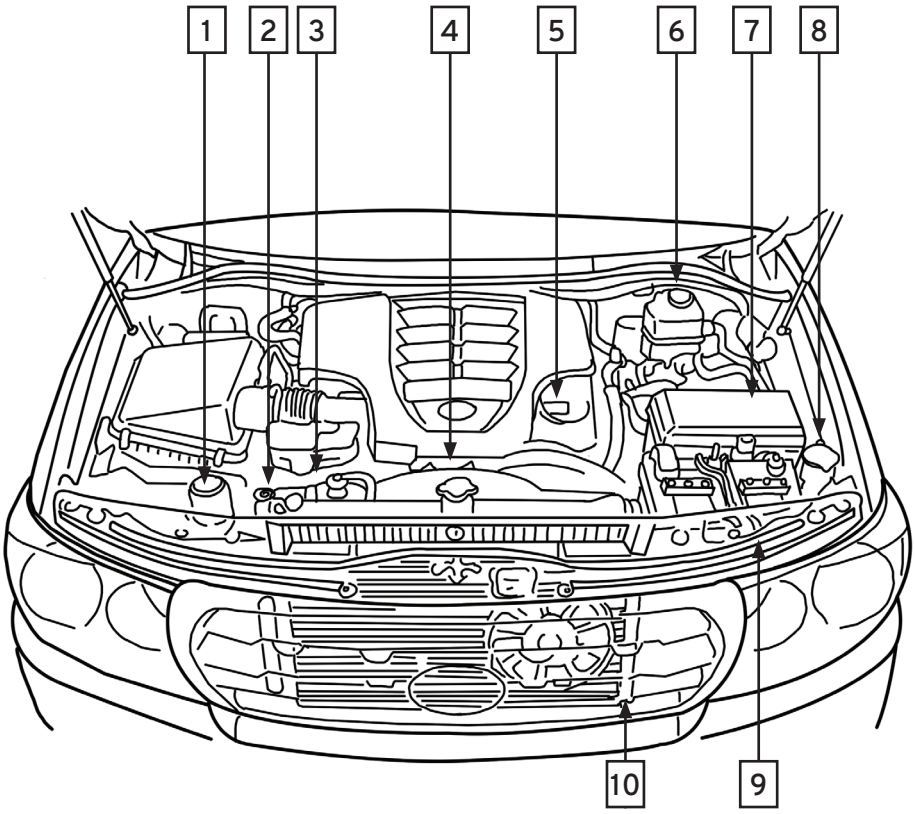

1. Spare wheel
2. Roof rack
3. Wing mirrors
4. Bull bar
5. Wheels
6. Headlights
7. Indicator/hazard lights
8. Windscreen
9. Sun roof
10. Snorkel
11. Power steering fluid reservoir
12. Engine oil level dipstick
13. Engine coolant reservoir
14. Cooling fans
15. Engine oil filler cap
16. Brake fluid reservoir
17. Fuse box
18. Washer fluid tank
19. Battery
20. Condenser
21. Radiator

(Guest) Lecture: Understanding and Preparing Safari Vehicles (30 min)

In the following lecture, explain what a driver needs to do in order to prepare the vehicle for a long trip. Include the following elements:

- Vehicle check pre-departure
- Vehicle preparation
- Packing the right stuff for a remote adventure

SAY:

A driver must be familiar with his vehicle, from which side the indicator is, where to fill up the fuel from, to handbrake etc. that's where these checks will come in handy.

Before any safari the vehicle in use must be checked to ensure that it will have all the necessary equipment, and that it is safe to drive on any road. To do this you will have to make a few checklists that will be checked daily: Equipment Checklist and a Vehicle checklist.

The equipment list are items that should always be in the vehicle, these items are essential and should not be skipped. Changing a flat tyre, road safety when you have a breakdown day or night, and client health and safety all require these items to be there.

The driver is responsible for the vehicle being driven. They must ensure that it is fit for use on the road, through conducting a walk round check of the vehicle daily using the vehicle check.

Equipment Checklist:

Wheel Spanner/Wrench	For removing wheel nuts
Jack – High lift jack or Bottle Jack	For Jacking up the vehicle to change tyre
Wheel nut Key	If wheel nuts are fitted with Lock nuts
Fire extinguisher	In case of fire
Spare wheel	Inflated to required pressure
Triangle	For warning traffic that you are parked
Reflective Jacket	2 minimum, for when stopped at night to repair vehicle
Wheel chock- To stop vehicle from rolling	Bricks, wooden blocks or stones will also work
First Aid Kit	For first aid
Tyre pressure gauge	for checking the new tyre is properly inflated
Jumper Cables	In case of flat battery
A recovery rope	In case you get stuck in the mud

Vehicle Checklist:

Water level	Water level must be checked while the engine is still cold before running.
Engine Oil level	Engine oil must be between the two markers on the dipstick
Power steering fluid	Must be on the Cold mark before while engine is still cold
Brake Fluid	Must be between the two markers on the side of the container
Clutch Fluid	Must be between the two markers on the side of the container
General cleanliness – engine bay	This is to ensure there is no grass or bird nests in the engine that could potentially start a fire
Windscreen fluid	Lightly soapy water to wash windscreen
Wheel nuts	Make sure all the wheel nuts are there, often with the vibration of bumpy roads and improperly fasten nuts they will fall off.
Wheel pressure	Check that all tyre s are at the required tyre pressure for the vehicle
Roof hinges	Make sure the roof of the Safari vehicle can open and close properly and easily.
Fridge power	If the vehicle has a fridge in the back, check if it powers on and gets cold.
Lights	Check all the lights: Brake Lights, Headlights, Park Lights, Indicators, and hazards.
Insurance	Insurance stickers must be up to date and easily visible from outside the vehicle.
Windscreen wipers	They must move freely across the windscreen and clear the windscreen of water

Exercise: Vehicle Pre-Check (20 min)

- Divide the participants into groups of 2 – 3
- Each group is given a partial checklist
- Groups must do successful checks as well as fill in items that has been omitted from the checklist list

Partial List 1

Engine Oil level
Power steering fluid
Clutch Fluid
General cleanliness – engine bay
Windscreen fluid
Wheel pressure
Roof hinges
Fridge power
Insurance

Partial List 2

Water level
Power steering fluid
Brake Fluid
General cleanliness – engine bay
Windscreen fluid
Wheel pressure
Roof hinges
Fridge power
Lights
Windscreen wipers

Partial List 3

General cleanliness – engine bay
Windscreen fluid
Wheel nuts
Wheel pressure
Roof hinges
Fridge power
Insurance
Windscreen wipers

SESSION 8B: **Safe Driving**

Learning Goals

Knowledge

- The participants will learn how to drive safely in various circumstances.

Attitude

- The participants will focus more on safety while driving a vehicle.

Skills

- The participants will be able to select the right gears in various circumstances.

AGENDA

Lecture: Road & Off-Road Safety and Navigation
(30 min)

Exercise:
Selecting the Correct Gear for an Obstacle
(30 min)

Exercise:
Understanding the Terrain
(30 min)

INSTRUCTIONS

(Guest) Lecture: Road & Off-Road Safety and Navigation (20 min)

In this (guest) lecture, elaborate on road safety and defensive driving. Make sure to include the following topics:

- How to deal with other traffic
- How to minimise the risk of accidents
- How to navigate
- How weather and road conditions influence how you need to drive

Exercise: Selecting the Correct Gear for an Obstacle (30 min)

SAY:

Understanding how to navigate your vehicle safely over different terrains is very important. Driving on a tarmac road is different to driving on a marram road and again different to driving through muddy terrain.

Spinning tyres? Losing traction? Excessive acceleration, braking and clutch use compromises your ability to handle your vehicle on uneven and/or slippery terrain. The following introduces you to what makes a 4wd off-road capable and to maximise control safely.

In the following exercise, the participants will be introduced to how to change the range of a vehicle depending on the terrain.

Vehicles with off road capabilities often have 3 ranges to select from. High 2 (H2), High 4 (H4) and Low 4 (L40). These gears can be selected from the short gear lever that is situated next to the main gear lever.

It is important to know when each of these ranges should be selected and how to properly engage them.

H2	This gear is for open roads, mainly tarred roads and properly compacted marram roads. With this gear only the rear wheels will drive the vehicle.
H4	This gear is for marram roads, sandy roads, or very wet roads. By selecting this gear all 4 wheel will drive the vehicles – *(DO NOT MAKE SHARP TURNS WITH THIS GEAR ENGAGED)*
L4	This gear is for obstacles like muddy terrain, steep slopes, loose sand etc. *(DO NOT MAKE SHARP TURNS WITH THIS GEAR ENGAGED)*

SAY:

Depending on the vehicle, there might be wheel locks on the front wheel hubs that indicate FREE or LOCK (Hub Locks), this can be changed by turning it anticlockwise for FREE and clockwise for LOCK, vehicles that do not have these will do this action automatically.

For a vehicle that will drive in H2 the hub locks must be on FREE setting, for both H4 and L4 the hub locks must be on LOCK.

Changing gear:

1) *Stop before the obstacle and decide which gear will be best suited*
2) *change the Hub locks to necessary setting (FREE or LOCK)*
3) *Start the vehicle, and put the main gear in neutral*
4) *Step and hold in the clutch pedal*
5) *Move the short gear into the desired gear (H2, H4 or L4)*
6) *Release clutch pedal*
7) *Select 1st gear on the main gear lever*
8) *Drive the vehicle approximately 10 metres for the gears to engage*
9) *Drive through the obstacle*
10) *See step 1 and select driving gear (H2, H4 or L4)*

SAY:

The ability to change gear is not enough on its own, but the ability to change gear without jerking your passengers about in the vehicle requires skill and will take practice and patience. Setting off in H and L range are very different when it comes to the clutch.

Scenarios: Understanding the Terrain (30 min)

In this exercise, the participants will be asked to sit in the driving seat one by one and to handle the gear correctly based on the scenario. Ask the rest of the group to come and watch, if possible. If not possible, make sure after each scenario that the participant will explain to his/her peers what he/she did and why.

- Participants must be seated in the vehicle while the vehicle is parked.
- Main gear in Neutral, Range gear in H2.
- A random scenario will be presented to the participant
- Participant to decide and change the gears for the scenario presented.
- *If correctly changed, participant must change the gear back to original gear*

Scenarios

Scenario 1: Rivers and sandy road **L2**

Driving near a riverbed in Karamoja you approach a long sandy road, the furrows are deep and tracks are unclear with no possible way not to drive off road because of high banks. Which gear do you need to successfully traverse the sandy road?

Scenario 2: Water on the road **H4**

It's been raining in QENP Ishasha sector, you are on the main but unfamiliar road in the centre of the park. Approaching a short stretch of road where water has gathered. Clear tracks are heading into and out of the water as far as you can see. What would be the best gear for this scenario?

Scenario 3: Sticky mud – after rain **L2**

Cotton mud road after serious rains on route to Kidepo, you are on an off track and turning back will take several hours to find a new road. What gear must you choose to pass safely?

Scenario 4: Loose marram road **H4**

Driving through Rukungeri, you have just turned off of the main tar road to drive through the mountain pass. The road is composed of loose marram recently graded. What will be the safest gear to get through this stretch of road?

Scenario 5: Mud Track with deep furrows L2

You are in Murchison Falls, driving down the Queens track you notice a slightly slanted road, wet with slippery mud and deep furrows from other vehicles attempting the obstacle. What gear is required to make it through successfully

Scenario 6: Steep slope down L2

On the way to Murchison falls you have decided to take the scenic route through honeymoon track, you approach a steep down slope with a few bumps and crevasses along the way. Seelect the safest gear to go down the slope.

Scenario 7: Sandy road H4

On the way to Lake albert you chose to go down a long sandy road, boda drivers are passing you back and forth. Select your safest gear for this road.

Scenario 8: Uneven terrain, big rocks, and holes L2

Big rocks, deep holes very uneven off track following lions in QENP Mweya area, you have to go slow and not scare off the lions, choose the best gear for this scenario

SESSION 8C: **Common Car Issues & Changing a Tire**

Learning Goals

Knowledge

- The participants will learn about common car issues

Attitude

- The participants will become more attentive towards recognizing and solving car issues.

Skills

- The participants will learn how to jumpstart a vehicle and how to change a tyre.

AGENDA

(Guest) Lecture: Common Car Issues? (20 min)

(Guest) Lecture: Recognising and Solving the Issue (30 min)

Workshop: Jumpstarting a Vehicle (20 min)

Workshop: Changing a Tyre (30 min)

INSTRUCTIONS

(Guest) Lecture: Common Car Issues (20 min)

In this lecture the participants will learn more about common car issues. Make sure to include the following:

1) Understanding the vehicles we drive is one of the first steps in providing a good customer experience.
2) Vehicles should be checked on both a daily and monthly basis looking for different things.
3) Daily checks - engine oil, brake fluid, clutch fluid, power steering fluid, radiator water, battery terminals & a general engine overview. From there you will check tyre pressure and wheel nuts, you will check that you have your tools for changing the tyre (jack, wheel spanner and triangle) Finally you would check your fuel before every journey
4) Monthly checks - All of the above but now you also check under the vehicle. Any hanging bits, check the odometer reading (check if need service), shake tyres to see if they are loose, check gearbox oil and diff oil and diff oil levels, check fuse box (do you need to replace any fuses).
5) Before you leave for a safari it is important that you have checked your vehicle all of the above points mentioned.

6) While on safari you must check your vehicle daily to minimise the risk of facing issues while on the road

Say:

Let us move on to understanding and recognising common car issues.

While on Safari there are a few common car issues that you might encounter in your future safaris. During this module you will learn how to identify each of the problems and how you could safely rectify them.

These common issues might include:

- Overhearing
- Flat tyre
- Flat battery
- Vehicle not starting

Lecture: Recognising and Solving the Issue (35min)

OVERHEATING

Symptoms

- The heat gauge on the dashboard will be the first indicator, the correct position will be halfway between the Cold(C) and Hot(H) indicators, the closer it gets to the H indicator the hotter the vehicle.
- Another indicator will be smoke/steam from the engine bay
- The vehicle loses power
- The engine will stop running – at this point the engine is blown and should no longer be used.

Causes - Overheating can be caused by a variety of things pertaining to the engine,

- One of the most common causes will be the thermostat that is broken and is no longer opening. This can not be determined unless it is opened and examined.
- There was not enough water in the radiator to cool the engine properly
- A Pipe has burst\broken draining all the water from the radiator.
- Leaky radiator
- Not enough ventilation.

Precautions

- Check water level daily, if you have to add water to the radiator often the system needs to be checked.
- Make sure no foreign objects, like sticks/wires is caught in the engine
- Make sure the radiator screen is not covered with grass seeds or grass
- Make sure the fan is not broken during general check

FLAT TYRE

Symptoms

- The tyre is flat
- Vehicle is noticeably pulling to one side while driving.
- The vehicle does not have enough power when accelerating
- A flat tyre makes a noticeable sound while driving

Causes

- Leaky valve
- Foreign object in the tyre.
- Tyre was improperly inflated before journey

Precautions

- Check tyre pressure with a pressure gauge and ensure all tyres including flat tyres are inflated to the desired pressure.
- After checking pressure put some spit, or soapy water onto the vale to ensure it is not leaking
- A flat wheel is inevitable, this is why you have to ensure you have the proper equipment to change a tyre.

FLAT BATTERY

Symptoms

- Lights on the dashboard does not come on when inserting the key,
- The lights might also just be dimmed
- When turning the ignition, the engine does not turn over and you will just hear a clicking noise
- Engine turning over sounds laboured.

Causes - (When the vehicle is not running)

- Lights were left on for extended time
- Interior lights were left on for extended time
- Inverter was left on for extended time
- Ignition was left on for extended time
- Vehicle was started, driven for a very short distance, engine turned off. (if this happens multiple times the battery does not have enough time to charge while running.
- Old battery will need to be replaced with a new battery.

Precautions

- Make sure that everything is turned off before stepping away from the vehicle.
- Do not drive very short distances and keep stop-starting the engine.

VEHICLE NOT STARTING

Symptoms
- The engine is turning over very well but it is not starting

Causes
- Most of the time this is a fuel starvation issue
- If you have been driving and the engine starts jerking and stops, you have run out of fuel.
- If the vehicle had a little fuel and you stopped on a steep slope the fuel line might be out of the fuel.

Precautions
- Make sure you have enough fuel in the vehicle

Workshop: Jumpstarting a Vehicle (20 min)

In the following workshop, the students will learn how to jumpstart a vehicle.

Introduction:

SAY:

With a flat battery you will need to jump start the vehicle in order for you to continue your trip. To do this you will have to connect jumper cables between your vehicle and another vehicle.
You must practice caution when doing this as not to damage any electrical systems, the batteries or yourself in the process.

1) Park the 2 vehicle 2 vehicles next to each other
   a) Working Vehicle (Vehicle A)
   b) Flat battery vehicle (Vehicle B)
   c) Close enough for the jumper cables to reach both vehicles.
2) Open the engine bay of both vehicles
3) Start the vehicle with the full battery
4) Start connecting the cables
   a) Red is Positive (+)
   b) Black is Negative (-)
   c) Always connect positive first and then negative.
5) On vehicle A connect the red cable and then the black cable.
a) NB – ensure that there is another person holding the other end of the cable that is not yet connected, making sure the black and red end is not touching.
6) Now connect the red cable to vehicle B and then the black cable.
   a) Red is Positive (+)
   b) Black is Negative (-)
   c) Always connect positive first and then negative.

7) Now that the cable connection between the 2 vehicles are complete, increase the revs/ acceleration of vehicle A, while it is in neutral gear.
   a) This will now supply charge to vehicle B
   b) Allow this to charge for approximately 2 minutes.
   c) Allow this also to continue while attempting to start vehicle B
8) Try to start vehicle B
   a) If it does not start straight away, let it charge for another minute.
9) As soon as the vehicle has started, remove the Black cable from both vehicles and then remove the Red cables from both vehicles.

Ask the participants to practise this in small groups.

Exercise: Changing a Tyre (30 min)

In this exercise, the participants will learn how to change a tyre. Make sure to instruct the topic by showing it to the participants using a real vehicle.

Instructions:

1) Prepare the car

a) Apply the handbrake

b) Remove all passengers from the car.

c) Take the spare wheel and necessary tools out of the boot.

   i) If parked on the main road place the triangle approx. 20 metres behind the vehicle, turn on the hazard lights and wear a reflective vest

2) Position the wheel chocks

a) Chocks prevent the car from rolling while jacked up.

b) Position a rock on the opposite wheel to the one with a puncture.

c) For example, if your left-front tyre has a puncture, put a rock behind the right-rear wheel.

d) If your left-rear tyre is flat, you need a chock in front of the right-front

e) Use chocks for both front/rear wheels (as appropriate) if you have them.

f) Bricks or large rocks can do the same job if you don't have a dedicated chock.

3) Loosen the wheel nuts

a) It's easier – and safer – to do this while the car is on the ground.

b) You may need to lever off a plastic wheel trim first.

c) Turn the wheel wrench anti-clockwise and loosen the nuts to the point where they can be turned by hand (be warned – they may be tough to loosen).

d) However, don't remove them completely yet.

4) Jack the car up

a) All cars have dedicated jacking points – consult your handbook to see where these are.

b) Aim to position the jack at the side of the car, close to the punctured wheel.

c) Placing a small plank of wood under the jack will help keep it stable.

d) Raise the car slowly until the flat tyre is 10-15cm off the ground.

5) Remove the flat tyre

a) Fully loosen and remove the wheel nuts, then gently pull the tyre towards you until it comes free.

b) Place it flat on the ground.

6) Mount the spare wheel

a) Slide the spare wheel onto the protruding hub bolts, or in line with the wheel nut slots (warning: it's heavy to lift it off the ground to do this).

b) Replace the wheel nuts and tighten them by hand.

7) Lower the car and tighten the bolts

a) Use the jack to drop the car down slightly, so that the spare tyre is in contact with the ground.

b) Now use the wrench to fully tighten the wheel nuts.

8) Fully lower the car

a) Bring the car fully down to earth and remove the jack.

b) Consider giving the wheel nuts a final check for tightness.

c) Stow the jack and the other tyre in the boot, along with the rest of your equipment.

d) Note: if your car has a space saver, the old wheel will take up more space in the boot.

9) Check the spare tyre pressure

a) If you have one, use a tyre pressure gauge to check the spare wheel is fully inflated.

b) Alternatively, drive carefully to a petrol station and use the gauge there.

c) Pump up the tyre to the recommended pressure – as detailed in the handbook – if necessary.

10) Take your punctured tyre for repair

a) Visit a garage or tyre fitters at the first opportunity and give them your punctured wheel.

b) They will advise whether to repair or replace it.

c) Don't drive on a space-saver spare wheel for longer than is strictly necessary – they are only intended for emergencies.

d) If the tyre can't be repaired and you need to replace it.

Ask the participants to practise this in small groups.